Model:P1908-25A-2

Includes components:

(A) Bracket L404*135 (1 piece)
(A) Bracket L401*135 (1 piece)
(B) Power supply group (1 group)
(C) ∅120 Ceiling Mount Set (1 piece)
(D) ∅470 lampshade (1 piece)

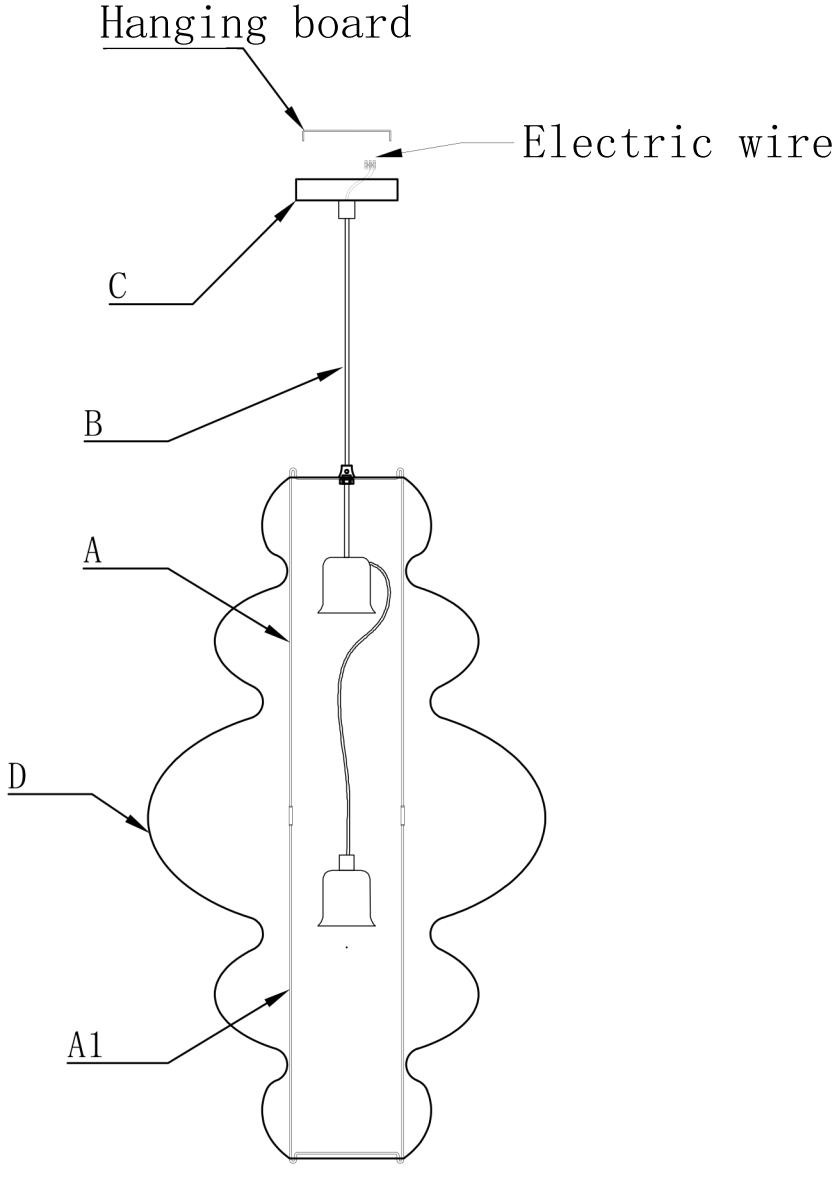

Important Safety Instructions

It is strongly recommended that the installation be carried out by a certified electrician.

This luminaire is rated for a maximum of two (2) 8-watt E26 bulbs (inclusive). To avoid fire risk, do not exceed the recommended power value.

Rated voltage: 120V, Rated frequency: 60Hz, Maximum power: 16W, Maximum power per bulb: 8W.

Warn

All wires are connected. When unpacking, be careful not to pull any wires, as a poor connection could result in an issue. Do not connect power until the fixture is fully assembled. To reduce the risk of fire, electric shock, or personal injury, always turn off the fixture and allow it to cool before replacing bulbs. Do not touch or look directly at the bulb when the fixture is illuminated. Keep flammable materials away from lit bulbs.

Warning: This product may expose you to lead, which the California government has confirmed can cause cancer, birth defects, or other reproductive health problems. For more information, please visit www.P65Warnings.ca.gov.

This product is not a toy and has no entertainment value.

Warning: Choking Hazard.

Keep the power cord at least 3 feet away from cribs, bassinets, and toddler beds. Keep out of reach of children under 3 years of age.

Assembly and installation

Disconnect the power supply from the fuse box or circuit breaker panel.

1. Carefully remove all parts from the packaging. Before discarding the cardboard box and packaging materials, please confirm that all the parts listed above are complete.

2. Select a suitable ceiling with adequate load-bearing capacity. Install the mounting plate onto the junction box using screws.

3. Pass (B. wire assembly) through the middle hole of (A. bracket), install them together, and tighten to secure.

4. Assemble (A. bracket) and (A1. bracket) together and tighten them to secure them.

5. Combine (A/A1 Bracket) with (D Lampshade) to form a single unit.

6. Assemble the (ABD. lamp body assembly) and (C. ceiling assembly) that you just made, tighten the threads, paying attention to the wires protruding from the (C. ceiling plate) side, and then tighten the side screws to secure the power cord.

7. The entire structure of the lamp is now assembled, hereinafter referred to as (lamp body).

8. Connect the wires. (Warning: Ensure the circuit breaker is de-energized before connecting the wires.) Use the terminal blocks (terminal caps) provided by our company to make the following connections:

A. Black wire: Connect the black wire (usually black or smooth wire) of the light fixture to the black wire of the junction box.

B. White wire: Connect the white wire (usually white or textured) of the light fixture to the white wire in the junction box.

C. Green Wire/Ground Wire: Use a green grounding screw to connect the green wire (usually green or bare copper wire) of the light fixture and the power ground wire (from the junction box) to the mounting plate. If the junction box itself is grounded, the power ground wire may already be connected to the junction box.

Note: Ensure there are no exposed wires outside the terminals. Gently tuck all connected wires into the junction box.

9. Hang (the light fixture). Hang the (light fixture) on the mounting plate to conceal the exposed wires. (C. Ceiling mount), cover the wires, and tighten the side screws.

10. Install the light bulb. Install the appropriate light bulb (not included in the accessories) according to the instructions on the luminaire's nameplate. Do not exceed the maximum wattage; the parameters for this luminaire are stated at the beginning of the document.

Installation complete, restore power to the circuit breaker.

Care Instructions

Do not use polishing agents or cleaning agents to wipe the light fixtures. Simply wipe them clean with a soft, dry cloth.

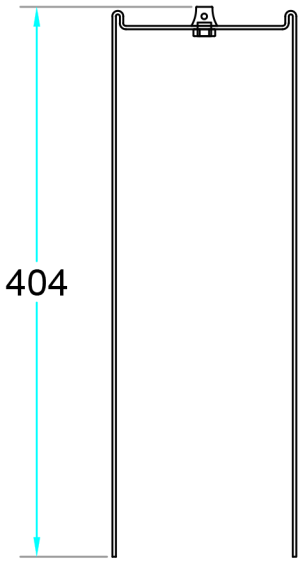

A. Bracket L404*135

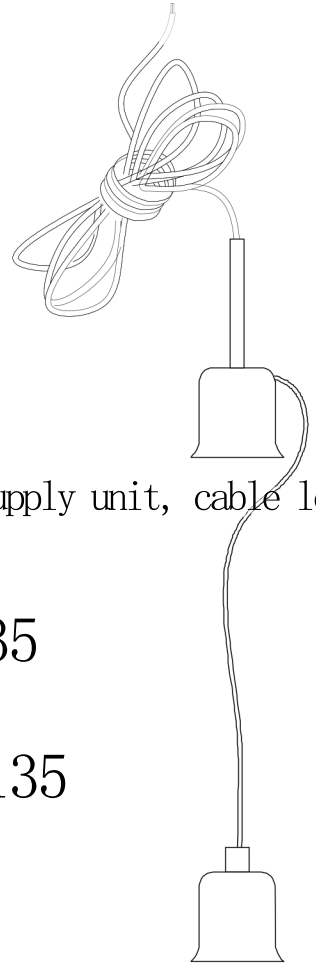

B. Power supply unit, cable length 3 meters

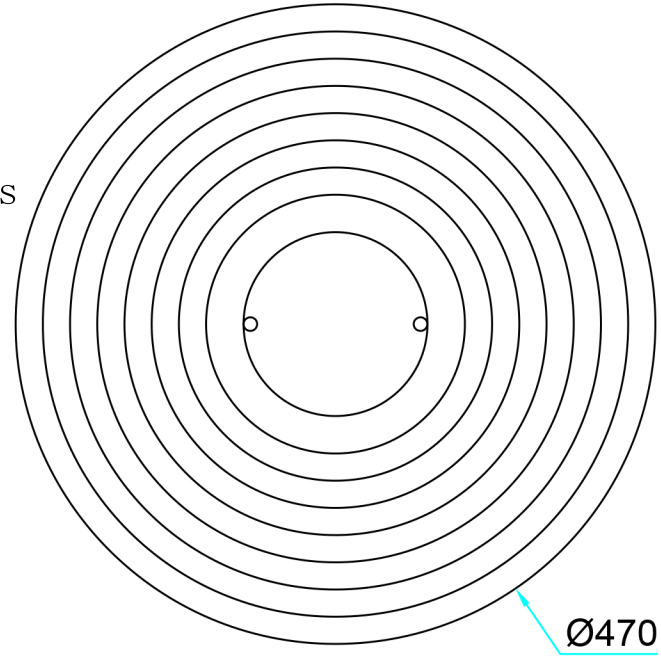

D. Ø470 lampshade

A. 1 Bracket L401*135

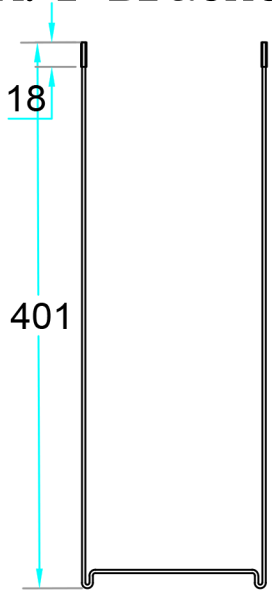

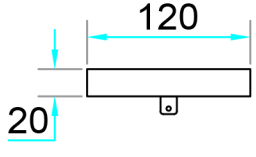

C. Ceiling mount

Akari Juni Pendant Lamp

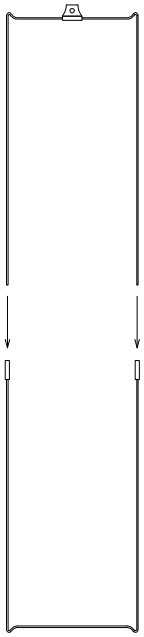

1:Insert bracket

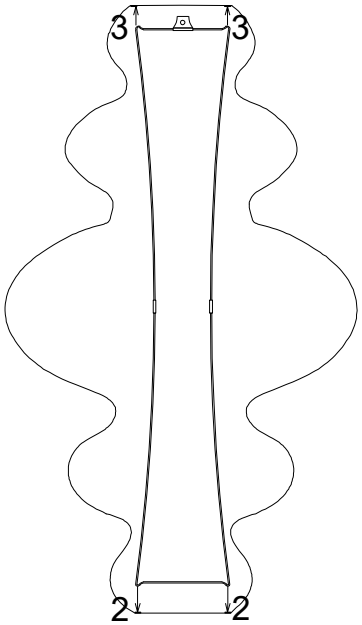

2:Use a bracket to support the bottom buckle of the lampshade
3:Stretch the lampshade upwards and insert it into the top bracket

4.Thread the power cord through the middle of the bracket
and then tighten the lamp head and wire holder

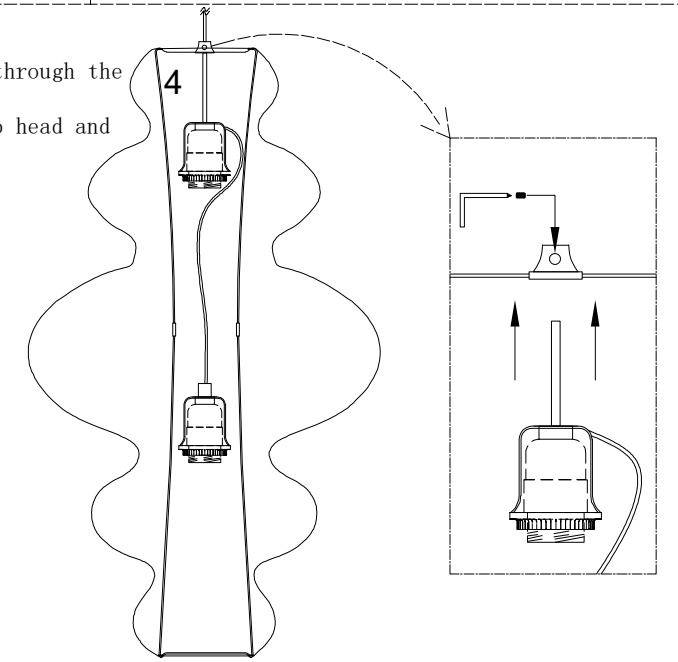

Akari Juni Pendant Lamp

5:Fix the hanging board to the ceiling

6:Connect the lamp wires to the reserved wires

7:Fix the ceiling tray and hanging board from the side
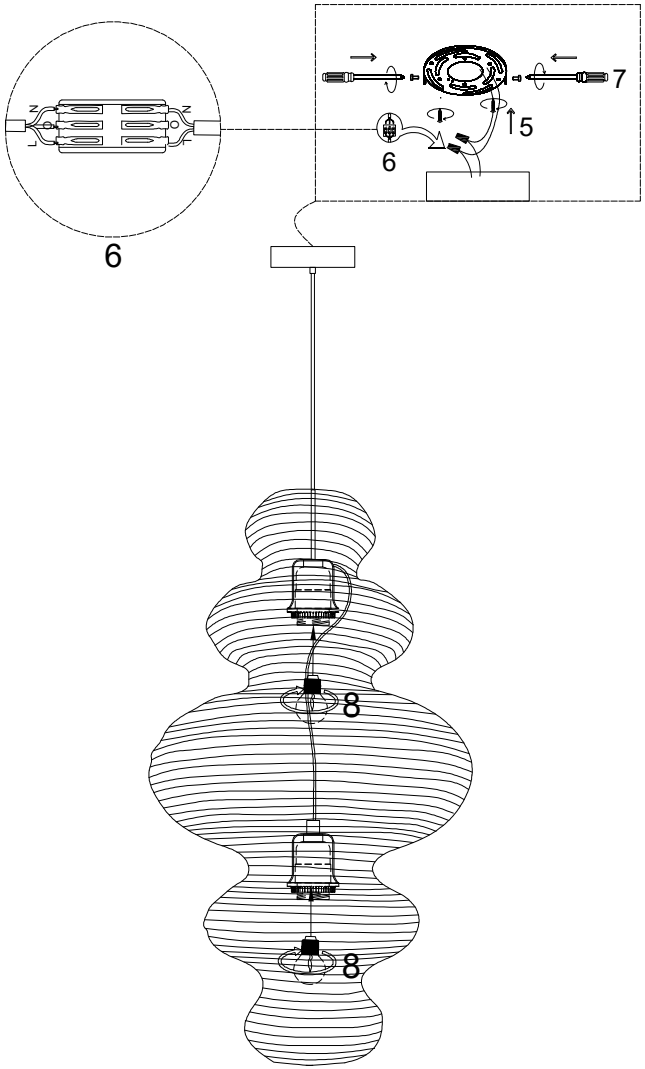
8:Installing bulb